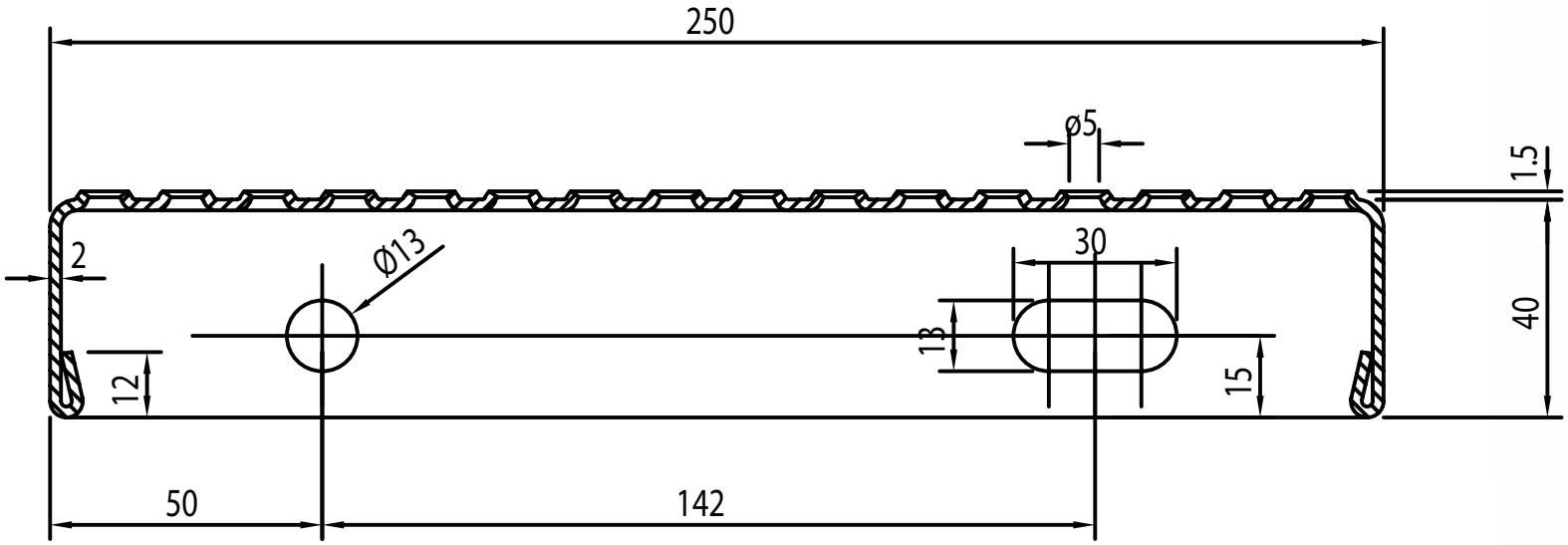

PcP

Product name
OPTIMO Tread SPS